Buttress Application for These Enclosures:

TE3/SE3

LETE3/LESE3

TETE3/TETE3
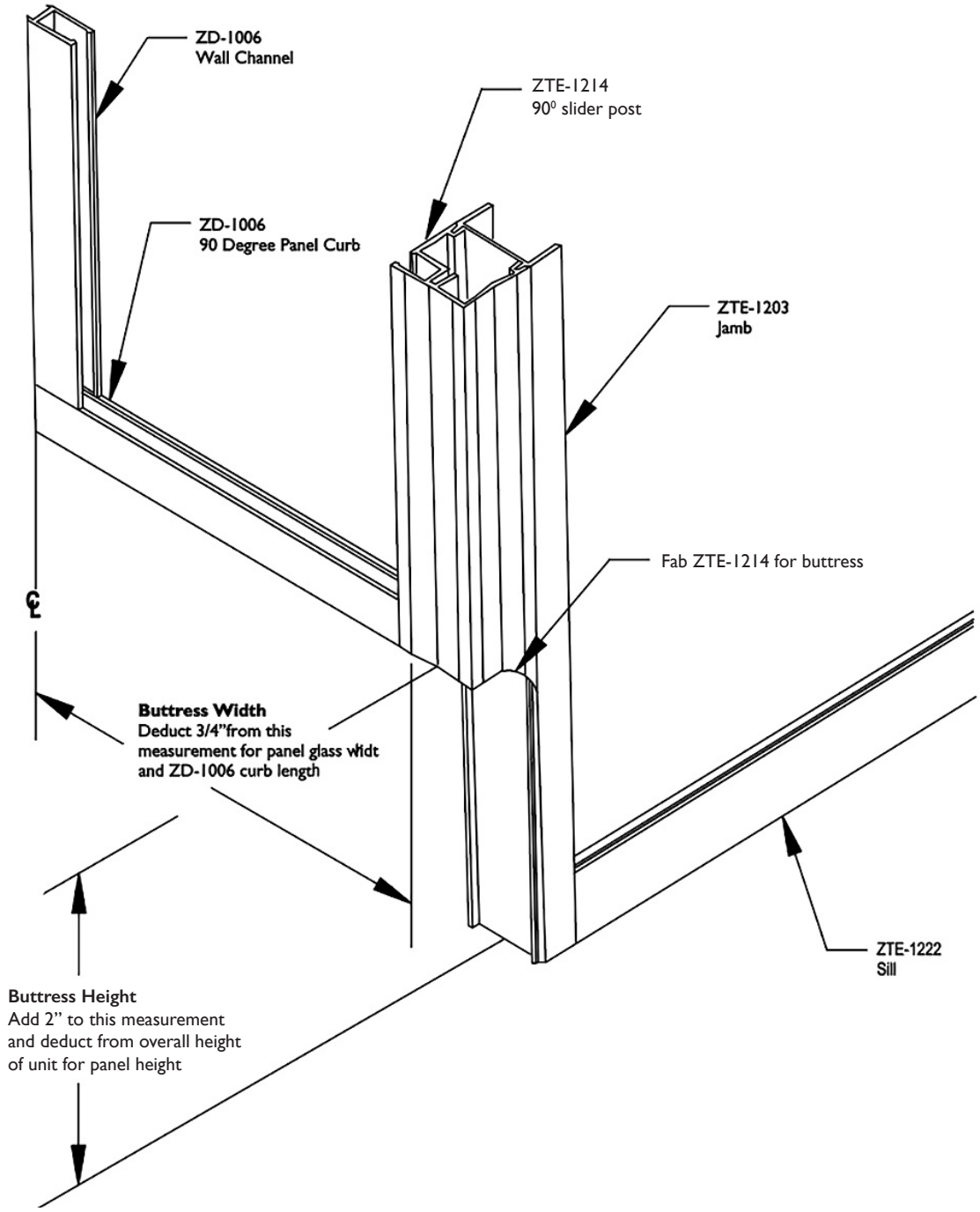
ETE3/ESE3